LMS ServoTechnics

Boldman Palletti

DENFORD

AGV
User's Manual

Denford AGV Manual
Revision A

Contents

Section Title	Page No.
1. General Description	2
2. Physical Description	4
3. Creating the Track	6
4. Basic Operations	8
5. Features	10
Appendices	
a. Specifications	12
b. Circuit Diagram	13

1 General Description

The Denford AGV (Automatic Guided Vehicle) has been specifically designed and built to function as a stand alone device with the ability to stop at designated docking stations as required by a host control system.

The whole machine is housed in an extruded aluminium profile fabrication which provides a ridged and robust structure. The top panel of the machine can be removed by sliding it backwards out of the top section profile grooves.

Inside the structure the workings of the AGV are mounted on a single aluminium chassis plate which means that apart from the operator control panel the chassis and the machine body can be separated for maintenance purposes.

The AGV is powered by two 12 volt 17Ah maintenance free rechargeable lead acid batteries suitable for cyclic operations. The AGV is equipped with an internal charger which shuts down when the batteries are fully charged so that the machine may be left to recharge overnight if required.

The AGV is controlled by an intelligent motion controller known as the Denstep. The Denstep has the capability to directly control 3 stepper motors, has an analogue signal for external speed control, 16 digital inputs, 16 digital outputs, 2 analogue inputs and specific digital inputs for limits & home functions.

Traction is provided by a permanent magnet DC motor driving one of the front wheels through an industrial right angled gearbox with a ratio of 30:1. The speed of the AGV is controlled by a 2 quadrant DC drive which receives an analogue command signal from the main controller.

Steering is performed by a stepper motor driving a worm and wheel gear set and proximity switches provide a home signal and end of travel detection. The AGV is particularly suitable for small areas because of the active rear wheel steering employed which enables the machine to turn corners quicker than conventional systems.

The machine has been designed to follow a simple white tape line flanked by black tape to provide the necessary contrast for the optical sensors. Two sensors are located at the front of the AGV and mounted on and ahead of the steering pivot point to provide a stable operation and minimise ‘hunting’. When either of the sensors detects a black tape the stepper motor steers the AGV away from that black line and back onto the white line.

The steering sensors have an additional purpose. In normal operation only one of the sensors will detect a black line at any one time. This situation has been exploited to provide simple speed control of the AGV on its travel around the circuit. If both sensors detect a black line at the same time then steering is momentarily inhibited and the event is counted. It is therefore possible using different numbers of strips across the white line to instruct the AGV to run at different programmed speeds.

General Description

So that the AGV can be made to stop at pre-determined points around the ‘track’ the machine is fitted with docking sensors comprising a transmitter and a receiver. If the receiver detects a light ON situation as it passes a docking station/pillar then the AGV will stop. It’s transmitter will then send a signal to the docking station station/ pillar to inform the host system that it is at the station. When the AGV receiver detects a light OFF situation it continues on it’s way.

The AGV is also equipped with a ‘radar’ sensor at the front of the machine so that it stops if there is an obstacle in the way. This is a sophisticated burst fire system and the AGV is prevented from moving until the obstacle is removed. Whilst the AGV is stationary a voice message is emitted to inform the personnel that an obstacle has been detected.

At the rear of the AGV an operator panel is furnished with various controls which include a main isolator, the battery charger mains connection, battery warning and manual controls. The use of these is explained in the relevant section of this manual.

2 Physical Description

Internal Components

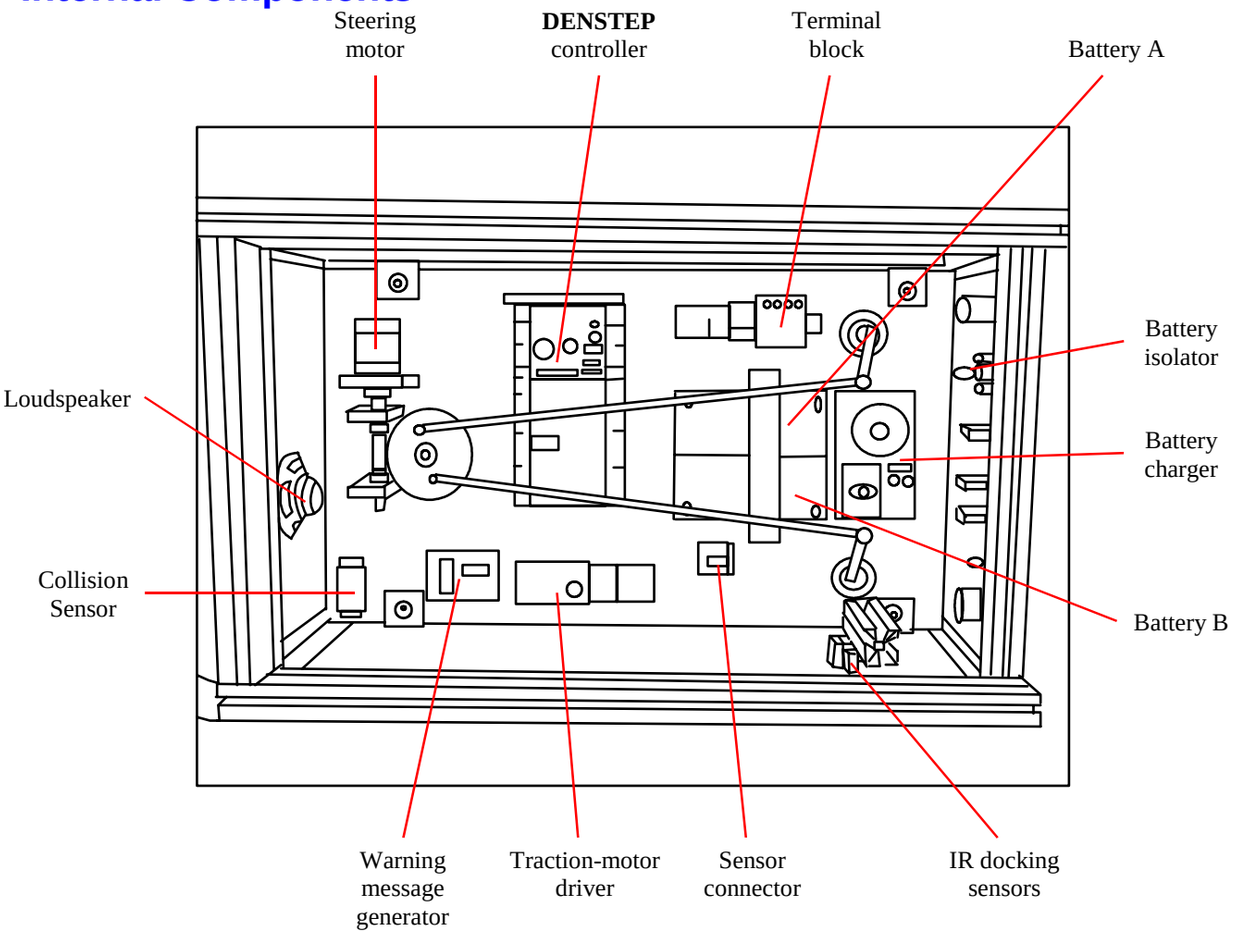

By removing the sliding top cover, the inside of the AGV may be easily accessed. This makes maintenance and configuration tasks simple and easy to perform without the need to move the AGV to a workshop. Settings can be modified in the workplace with a minimum of fuss.

The components which you may need to identify are as follows :

Warning Message Generator - In order to edit the preset warning message issued when an obstacle is detected (see section 5 for instructions)

Radar Sensor - atmospheric conditions and other activities (such as transportation) could cause the proximity sensor to lose calibration, see section 5 for instructions on how to re-calibrate the sensor

IR Docking sensors - These can be placed on either side of the vehicle in order to cater for both clockwise and anticlockwise circuits (see section 5 for instructions).

Physical Description

External Components

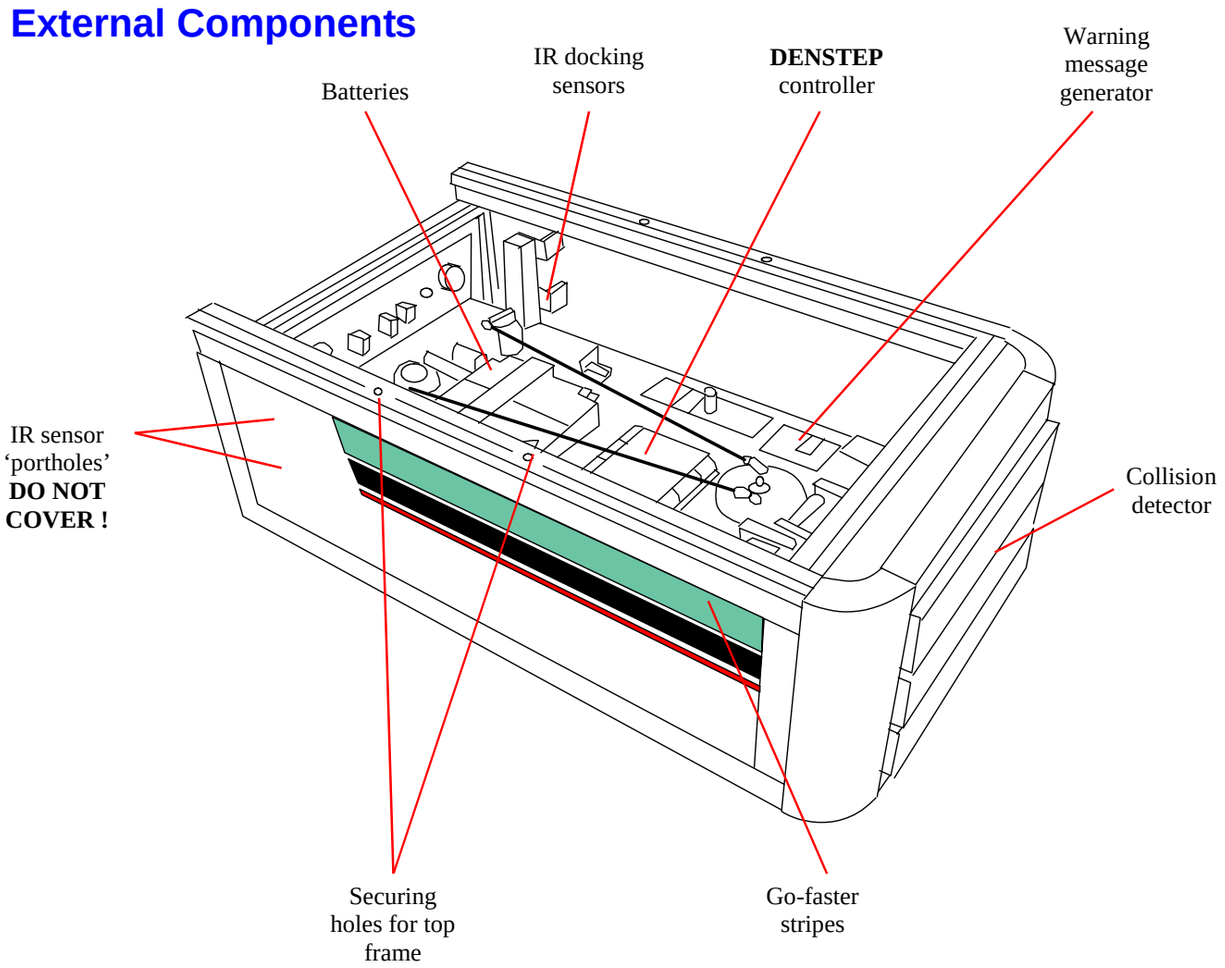

It is extremely important that nothing is placed over, or allowed to cover the infra-red sensors as this will prevent the AGV from stopping at each docking station.

The four securing points may be used to affix an extra support frame to the top of the vehicle.

3 Creating the Track

This Automatically Guided vehicle uses high-performance, high tolerance photo-electric sensors to follow a pre-set track along a level surface. This makes it very versatile in terms of both track layout and track material. The vehicle is able to follow tape, paint and many other types of line and this allows both temporary and permanent setups to be used.

The track layout is entirely up to you but must conform to the following points :

- The track should be flush with the floor surface. The wheels cross the track at points and steering can be affected if boards, etc. are used to create the track.

- The track must be created with a central white strip bordered by two black strips which must be of the following configuration :

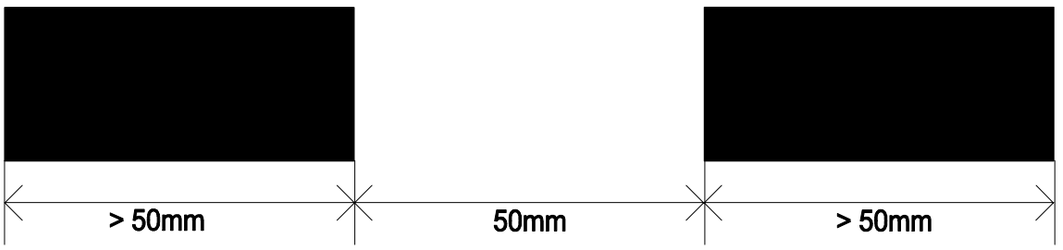

- The **minimum radius** of a turn is **400mm** to the centreline of the track. For turns greater than 90 degrees this should be increased to 1600mm.

- The track can be constructed using any materials available, for temporary tracks this could be sticky packing tape and for more permanent tracks could be spray paint.

Corners

The AGV must be instructed to slow down before turns and docking stations and failure to do so may cause the AGV to overshoot the corner. The AGV may also instructed to increase running speed whilst negotiating straight track. These instructions are given to the AGV by black stripes placed across the track before and after the corner.

Each set of stripes should be placed **at least 1 AGV length from the start/end of the turn**. (See diagram overleaf)

SLOW DOWN
Two stripes tell the AGV to slow down. Each stripe should be approx. 50mm wide and 80mm apart.

RESUME SPEED
Three stripes tell the AGV to speed up again. Each stripe should be approximately 50mm wide and placed 80mm apart.

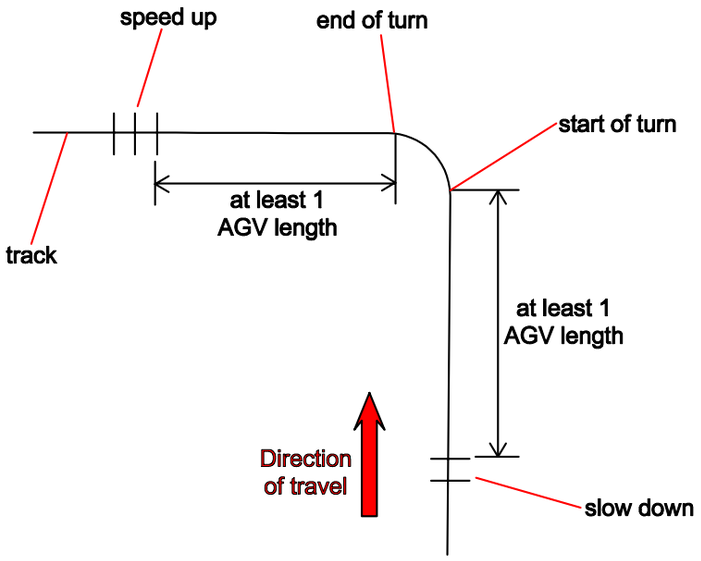

These instructions can also be used if the vehicle is required to travel slowly along a particular section of track. The default speed is SLOW.

Other notes about track creation

Two corners one after another (in the same or different directions) must be separated by **at least 1 AGV length** otherwise the AGV may be unable to negotiate the corner.

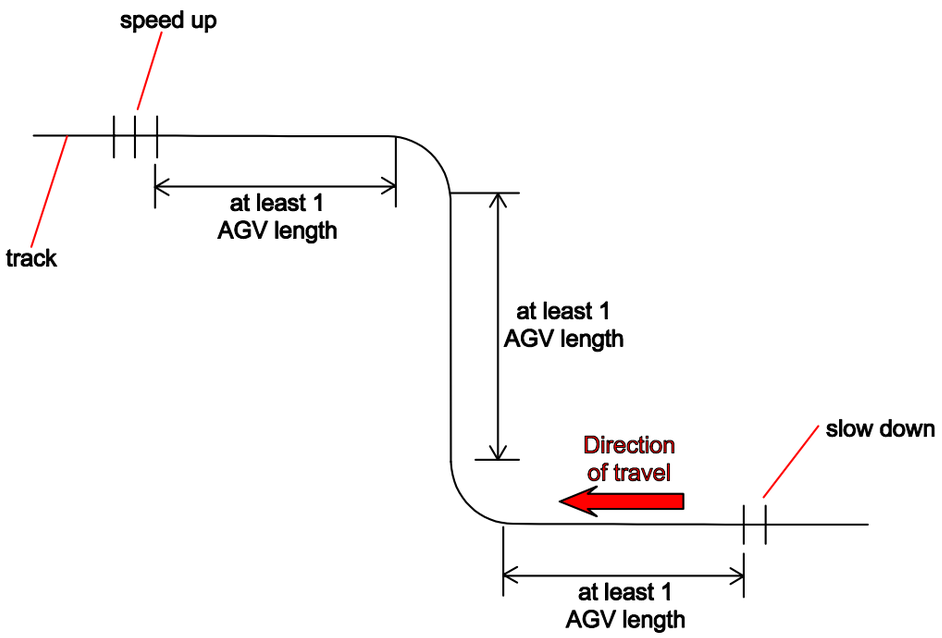

4 Basic Operations

This Automatically Guided Vehicle is designed with safety and ease of use in mind, and so very little user intervention is required besides configuration. Setting up the vehicle for operation is very simple :

1) Inactive mode

Once the AGV is powered on, using the isolating key-switch, it is set immediately to **inactive mode** to allow the operator to position it near to the track and/or make any adjustments (see appendices).

2) Manual mode

When in inactive mode (ie. the AGV has just been powered on), press the **RESET** button on the rear panel to set the AGV into **manual mode**. The steering will align centre, and then the AGV can be 'driven' manually using the **LEFT** and **RIGHT** buttons on the rear panel. Holding both buttons down moves forward. Holding down the **LEFT** button alone turns to the left and holding down the **RIGHT** button alone turns to the right.

Using this method the AGV can be aligned with the track, (For track-laying instructions see section 2), or manoeuvred for storage or transport.

3) Automatic mode

When in manual mode, press the **RESET** button again to set the AGV into **auto mode**. This will cause the AGV to search for the track, and then follow it. It will automatically stop at docking stations and speed up and slow down according to track markings.

4) RESET

Pressing the **RESET** button at any time during the run sequence will reset the AGV to inactive mode.

5) EMERGENCY STOP mode

Holding down **LEFT**, **RIGHT** and **RESET** together whilst in auto mode will halt the AGV. The AGV must then be powered off and then on again to continue operations.

NB. This method should only be used if the AGV is malfunctioning.

Rear Panel Controls

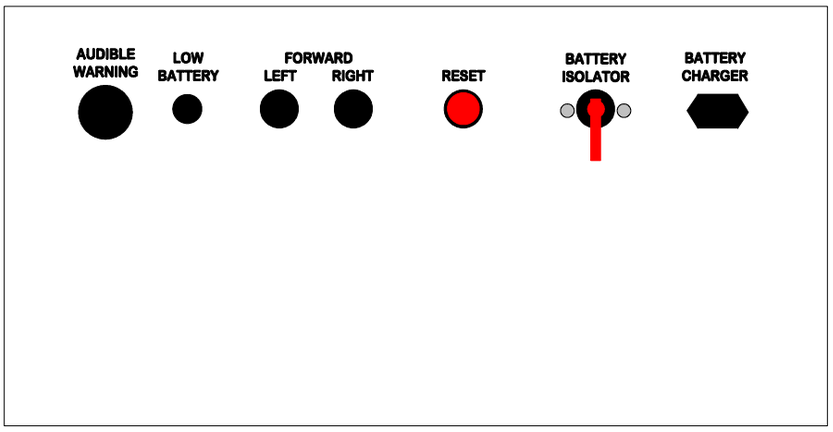

AUDIBLE WARNING

This beeper will sound when:

a) A **STEERING OVER TRAVEL** error occurs (see section 5).

b) The battery voltage reaches minimum operating level.

c) When the AGV passes over an instruction stripe in the track

LOW BATTERY

This indicator lights up to tell the operator that the battery is depleted.

LEFT

Holding this button depressed caused the AGV to move forward and turn to the left.

RIGHT

Holding this button depressed caused the AGV to move forward and turn to the right.

Depressing both LEFT and RIGHT buttons causes the AGV to move forward without turning.

RESET

Whilst in **inactive** mode causes the AGV to enter **manual** mode.
Whilst in **manual** mode causes the AGV to enter **automatic** mode.
Whilst running, resets the AGV to **inactive** mode.

BATTERY ISOLATOR

Used to power on the vehicle, this key cannot then be removed without causing the AGV to stop.

BATTERY CHARGER

Connect to a mains supply at any time to charge the AGVs internal batteries.

5 Features

Key features of this AGV are :

Advanced collision detector system incorporating some of the latest technology

User-definable audiable warning when an obstacle is detected

Internal battery charger

Constant monitoring of battery level by main controller to give accurate battery level warnings

Audio alert signal for operator attention

These are described in more detail below :

Advanced Collision Detector

The collision detector uses the metallic front of the vehicle as a large sensor to detect obstacles up to 500 mm from the AGV. This extremely sensitive system makes it ideal for educational sites and other situations where pedestrians and other objects are moving about and may be unaware of the vehicles approach. This important safety feature disables the AGV entirely until the obstacle has been removed and emits a recorded message (see below) for the duration that the obstacle exists.

During transportation, due to the slight discrepancy in environment, it may be necessary to periodically recalibrate the sensor for maximum sensitivity. To do so it is necessary to open the AGVs top cover and locate the **collision sensor** (see diagram on page 4 for location).

Once you have located the sensor, power on the AGV. Making sure that no obstacles are present within a 2m radius, press and hold the **BG** button for at least 1.6 seconds and then release. You have now successfully calibrated the sensor.

Audio Warning

When an obstacle is detected, a user-defined audio message/sound is emitted until the obstacle is cleared. To configure this message connect a quality push-button across the terminals indicated on the diagram. To record a new message, hold down the push button and speak into the microphone, release the button when you have finished. If you make a mistake then simply start again, the module will erase your previous message and store the new one instead. The maximum recording time is 16 seconds.

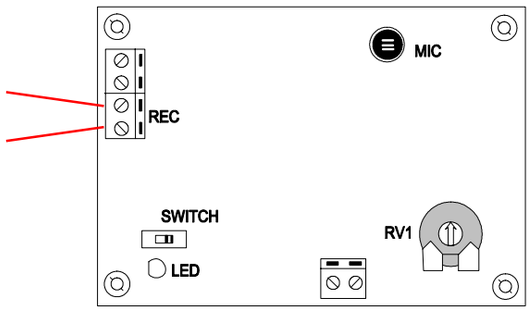

Features

Internal Battery Charger

No external charging source is required for this AGV as it incorporates its own internal charging circuit. Simply connect a mains cable to the charging socket on the rear panel to charge the batteries. The charger's intelligent electronics automatically senses when the batteries are fully charged and will automatically stop charging.

Battery Level Monitor

The main system controller constantly measures battery voltage. When the batteries are depleted the **LOW BATTERY** indicator will light to show that the battery level is approaching inoperable.

When the battery voltage reaches critical where the AGV can no longer operate, the vehicle will stop with the indicator lit and the buzzer will beep at 0.6 times per second. At this point the batteries must be charged and the AGV must be reset before it can be operated again.

Audio alerts

The buzzer will sound on the following events :

a) When the AGV passes over a signal stripe on the track - ie. You should hear two beeps before a corner and three after.

b) A beep will sound at 0.6 times per second when the battery level drops too low to operate.

c) A beep will sound at 1.6 times per second when the steering reaches its maximum travel - ie. The AGV has tried to turn too tight a corner. This requires that the AGV be powered off and reset.

Appendix A Specifications

GENERAL SPECIFICATIONS

Weight	Approx. 110 kg
Dimensions (w/d/h)	1000 x 550 x 375
Minimum turning circle	1 metre
Average speed (normal)	30 m/min Maximum
Average operating time (full charge)	≈ 8 hours

MOTORS AND DRIVES

Main traction motor	Permanent Magnet DC Motor driven by 2-Quadrant FET drive system
Steering motor	Stepper motor driven by DENSTEP stepper drive

BATTERIES

Main Batteries	Sealed lead-acid (gel-type) batteries (2) 17 Ah

BATTERY CHARGER

Input	200 - 265 volts AC 50/60 Hz
Output	25.0 - 30.0 volts 0.8 A limit
Weight	0.8 kg
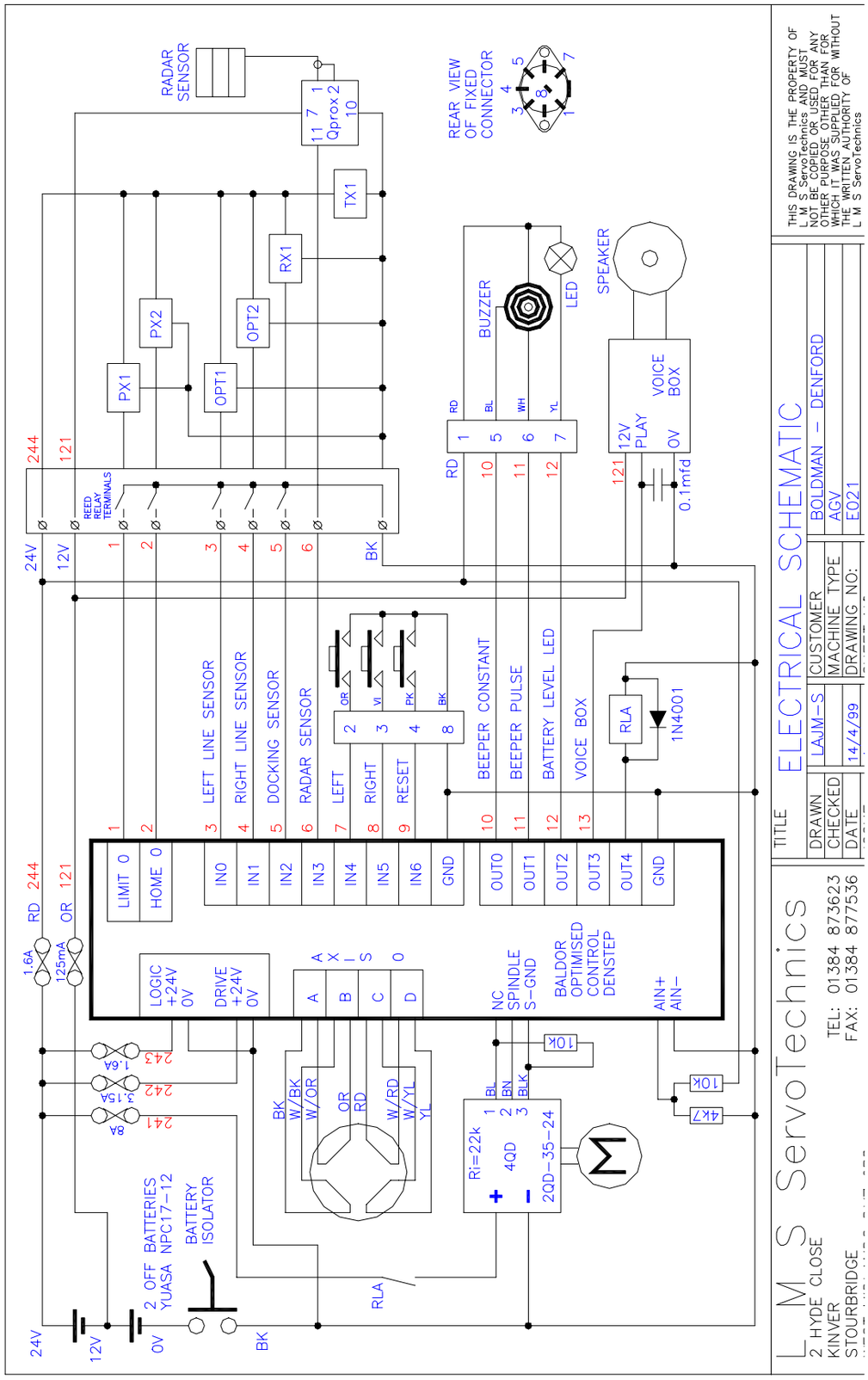
Appendix B Circuit Diagram